Joos



Joos-Throughfeed-Press

MADE IN GERMANY

Joos

The company Joos is one of the leading manufacturer for hydraulic presses and vacuum presses. We produce machines and plants for national and international customers, amongst others of the automobile and woodworking as well as aircraft industries.

Our product portfolio complies with the high requirements of the user relating to economy, ease of use, safety and reliability.

Joos-Throughfeed-Press

Economic veneering means a head start in quality and quantity in this time. The Joos-Thoughfeed-Presses meet the demands to the cost-efficient, economic and environmental-friendly machine.

The Joos-Throughfeed-Press is characterized by its solid construction and matured technique. We ensure a simple and safe operation as well as a durable product by using standardized components. The Joos-Throughfeed-Presses are manufactured as serial machine as well as customized design.

Technical data and sizes for serial machines are given on the back side of this leaflet.

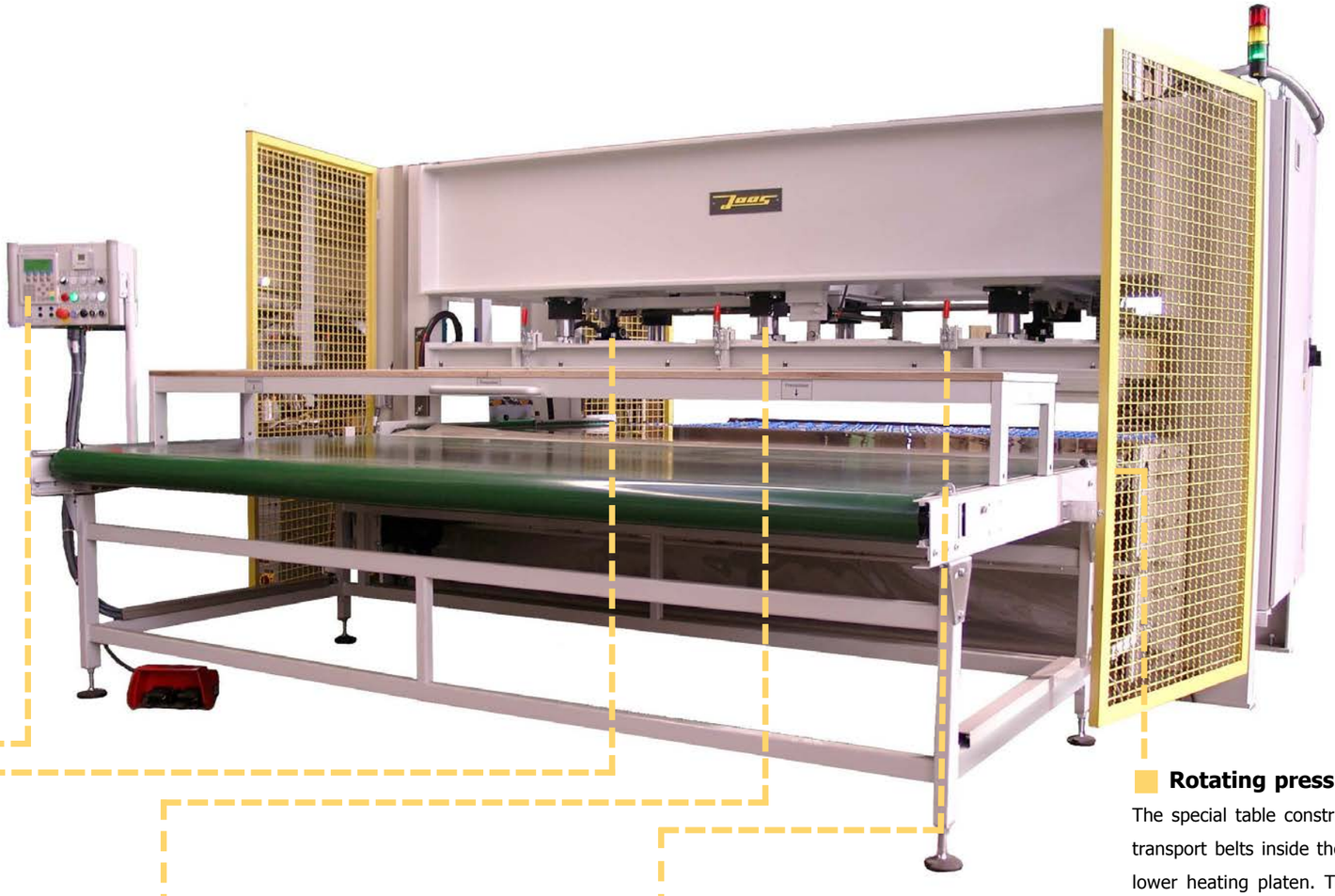

Control

The operation is carried out by means of the clearly-arranged operation panel and the operating elements. The switch cabinet with the integrated SPS-control is mounted on the back side of the press.



Joos A.B.S.-Safety system

Incorrect loaded or forgotten parts are immediately registered by micro sensors and the press opens automatically. Therefore, expensive consequences due to damages to the pressing table, the hydraulic and / or the heating platens are avoided.



Piston support

The pressing table lies dynamically onto the pistons without screw connection. The table is guided by a tie bar. The synchronism is carried out by the precise tooth-rack parallel guidance.



Foil tensioning

The foil covers the top heating platen as protection against dirt and wearout. The foil tensioning is effected by a fast-exchange tensioning system and can be exchanged without any major effort.



Rotating pressing belt

The special table constructions allows that the transport belts inside the press are guided around the lower heating platen. Therefore, these are protected against dirt and damage. The belt length is identical with the pressing surface.

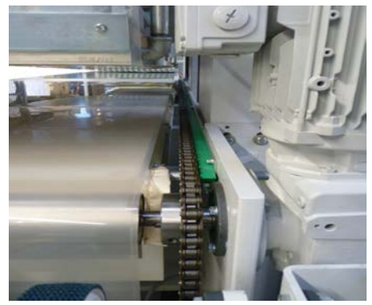

MADE IN GERMANY

Production planning

1. Brushing machine
2. Gluespreader
3. Cutter disc conveyor
4. Loading belt
5. Press
6. Discharge roller conveyor

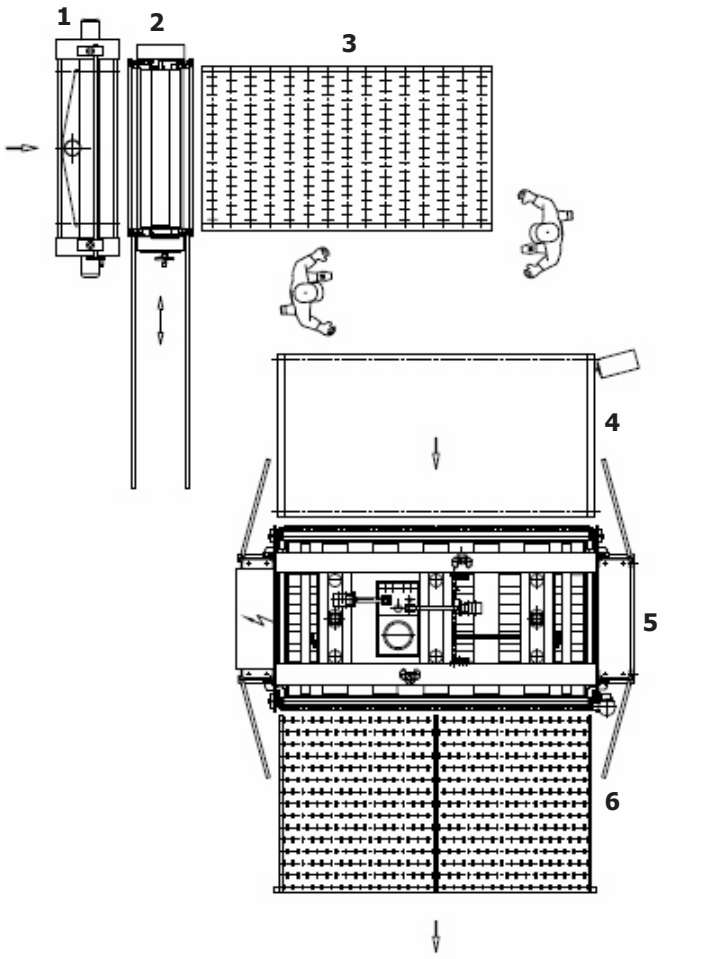

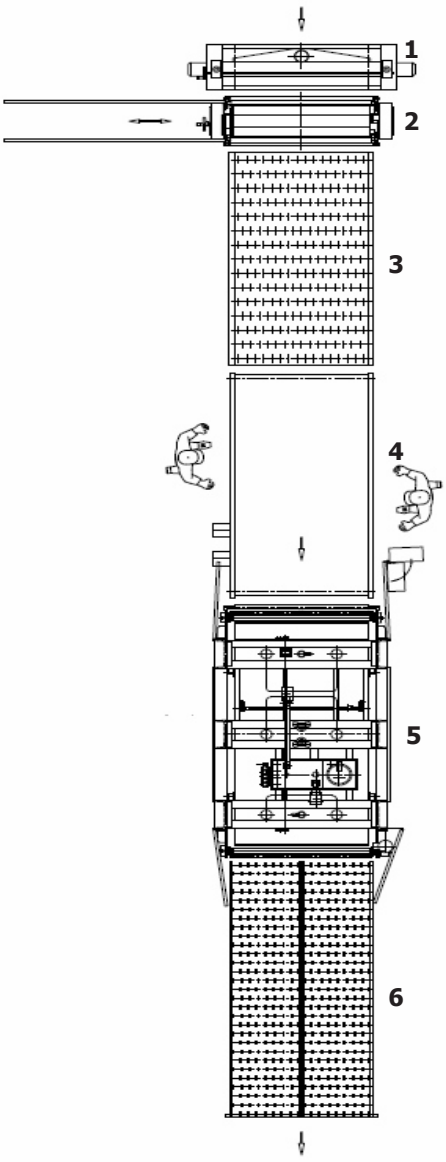

Heat generation

The Joos-Throughfeed-Presses can be combined with the existing thermic heating systems. Therefore, the energy and investment costs can be significantly reduced.

We offer the following solutions as options:

1. heating only by press internal heating devices
2. heating only by in-house heat sources
3. combination of the in-house heat source with the press internal heating devices

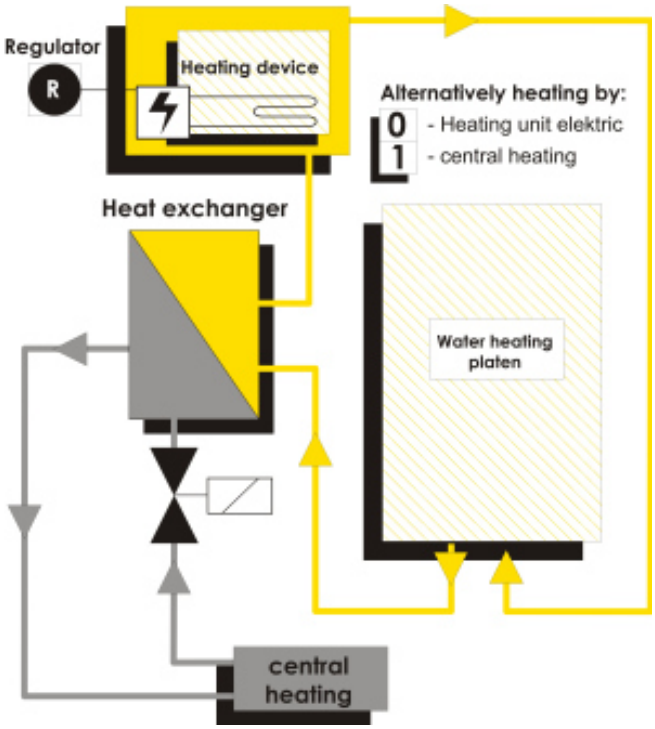

Application for Joos-Throughfeed-Presses

Joos-Throughfeed-Presses can be adapted to the conditions of the production. We have the solution for each customer requirement.



Production line with roller conveyor 3000 x 1300 mm, Brushing machine BM 1300, Gluespreader LAM/2 1300, overpassing Cutter disc conveyor MSRB 3000 x 1300 mm, Throughfeed-Press DLP 150/OK, pressing surface 1450 x 3000 mm, water heated, operating temperature 150°C and automatic stacking.

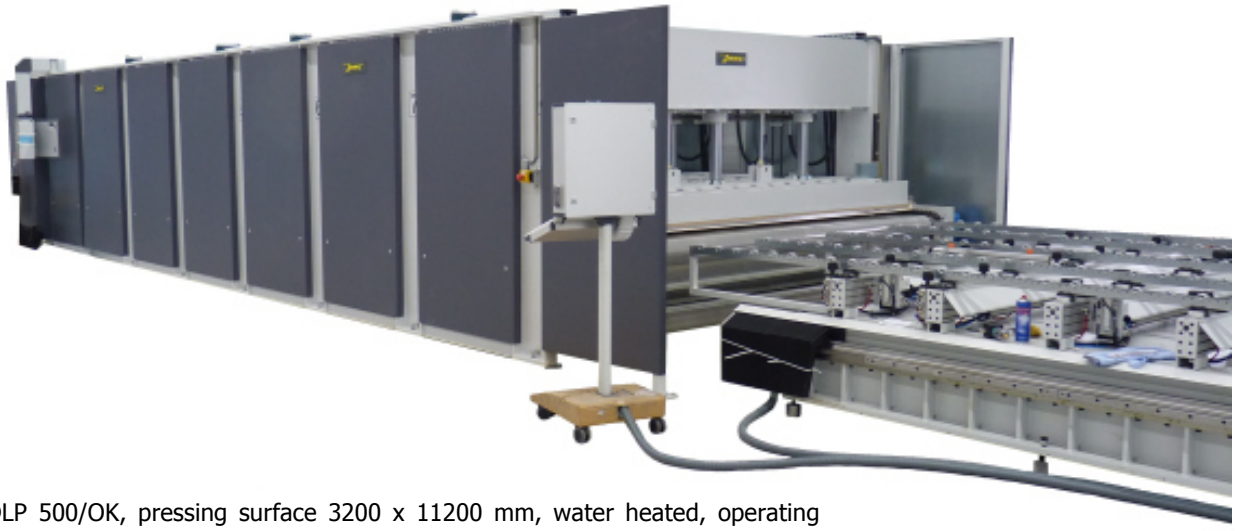

DLP 500/OK, pressing surface 3200 x 11200 mm, water heated, operating temperature 85°C, hydraulic aggregate and temperature devices are mounted on top of the press.

MADE IN GERMANY

Joos-Throughfeed-Press

	DLP 100/OK	DLP 120/OK	DLP 150/OK	DLP 200/OK
Pressing force max.	1000 kN	1200 kN	1500 kN	2000 kN
Pressing surface	2550 x 1350 mm	3150 x 1350 mm	3150 x 1600 mm	3800 x 1600 mm
Height of pressing area	200 mm	200 mm	200 mm	200 mm
Spec. pressure with full load	2,9 N/mm²	2,8 N/mm²	3,0 N/mm²	3,3 N/mm²
Operating pressure	315 bar	270 bar	340 bar	350 bar
Cylinder	4 x 90 mm	6 x 90 mm	6 x 90 mm	8 x 90 mm
Operating temperature	130°C	130°C	130°C	130°C
Operating voltage	400 V	400 V	400 V	400 V
Loading width	2550 mm / 1350 mm	3150 mm / 1350 mm	3150 mm / 1600 mm	1600 mm
Loading table	2550 x 1350 mm	3150 x 1350 mm	3150 x 1600 mm	3800 x 1600 mm
Discharge conveyor	2550 x 1350 mm	3150 x 1350 mm	3150 x 1600 mm	3800 x 1600 mm
Weight of the machine	8,6 t	10,2 t	11,8 t	15,3 t

Subject to modifications because of technical advantages. All data without liability.

Gottfried Joos Maschinenfabrik GmbH & Co. KG
Lange Strasse 41/ Gottfried-Joos-Strasse
D-72285 Pfalzgrafenweiler
Tel.: +49 (0) 7445 1840
Fax: +49 (0) 7445 18450
Mail: info@joos.de
www.joos.de

Joos Nord
Ron van Dam
Postbus 128
4650 AC Steenbergen
NETHERLANDS
Tel.: +49 (0) 7445 18485
Mail: ron.vandam@joos.de
www.joos.de

Joos USA INC.
680 Madison Avenue
Manalapan, N.J. 07726
USA
Tel.: +1-732 786 0490
Fax: +1-732 786 0491
Mail: info@joosusa.com
www.joosusa.com